MODEL：LY-700 FINISHING SANDER

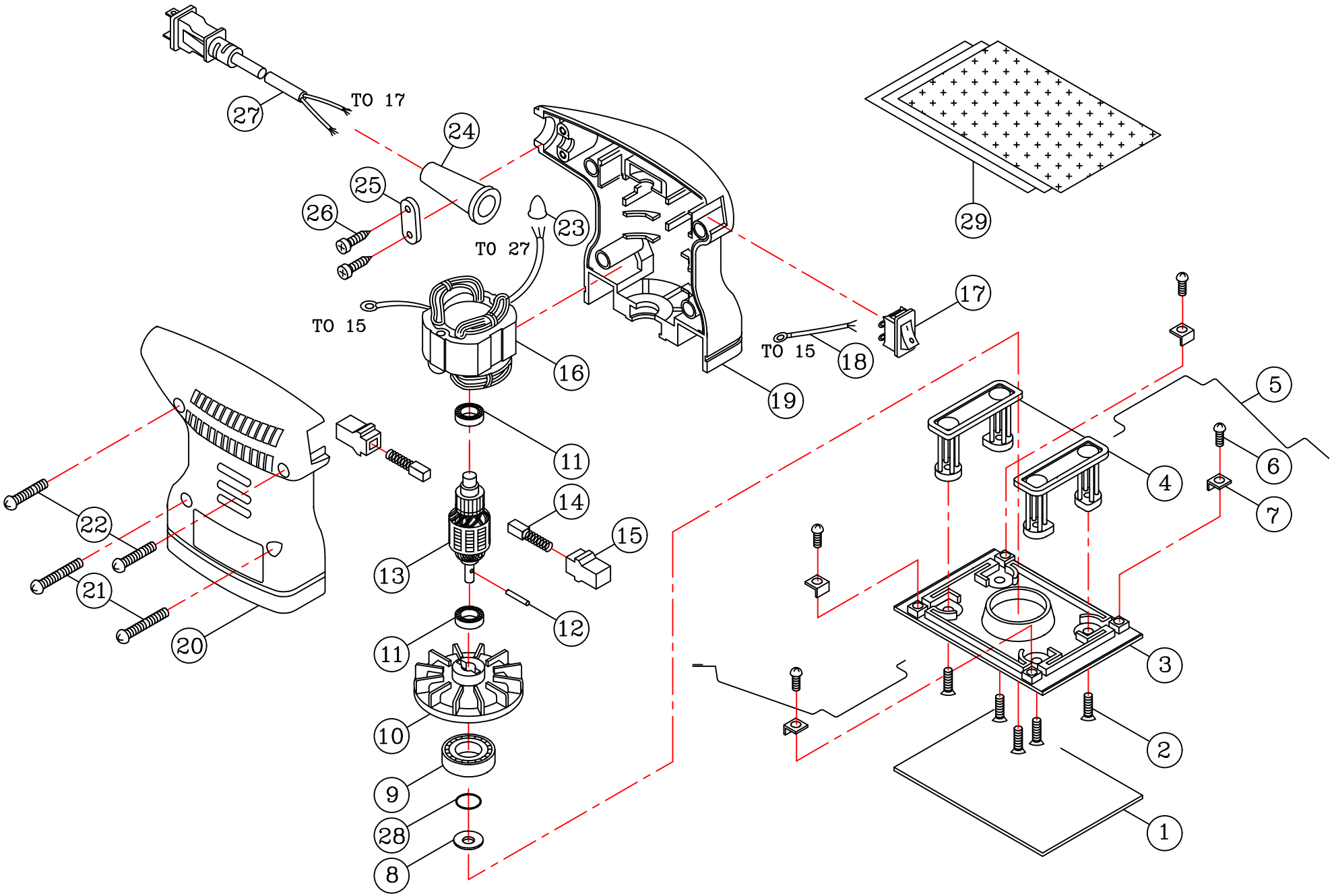

2013.12.11 NO.01~29 版次:1.4