MODEL : RS26 RECIPROCATING SAW

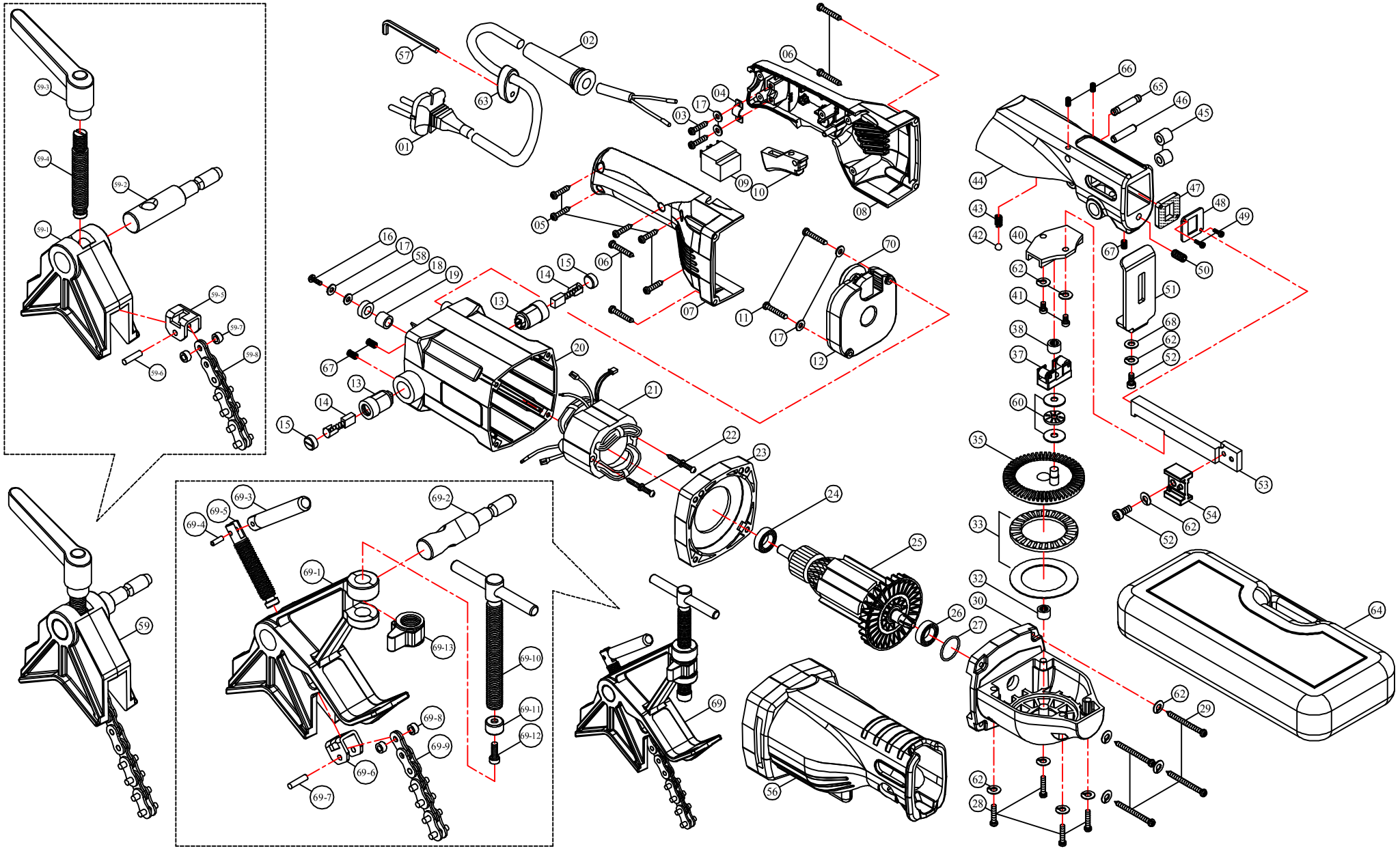

2011.10.12 NO.01~70 版次：2.3